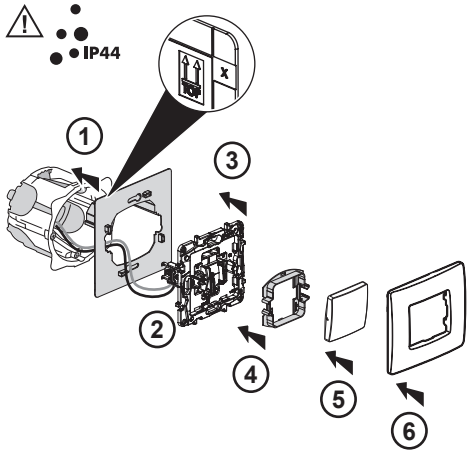

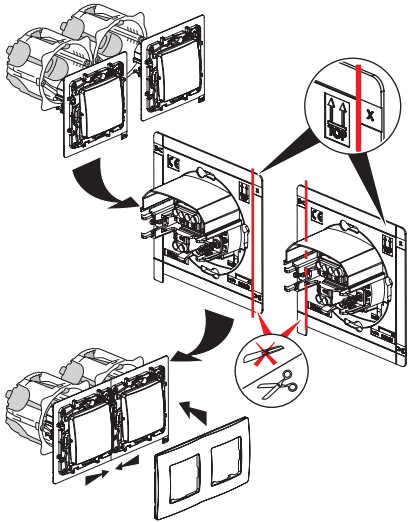

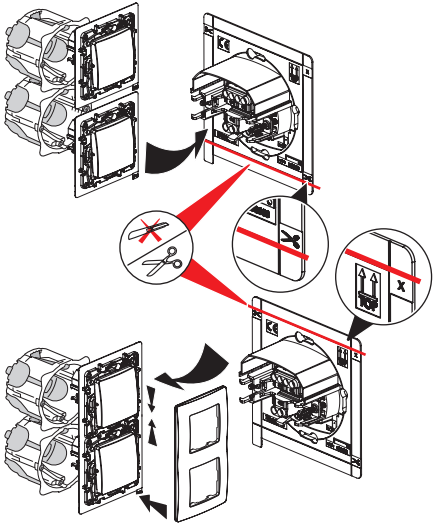

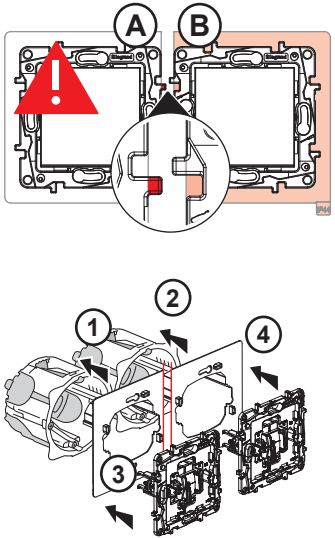

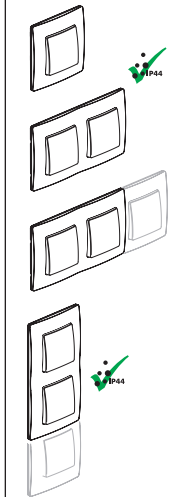

LE11478AA