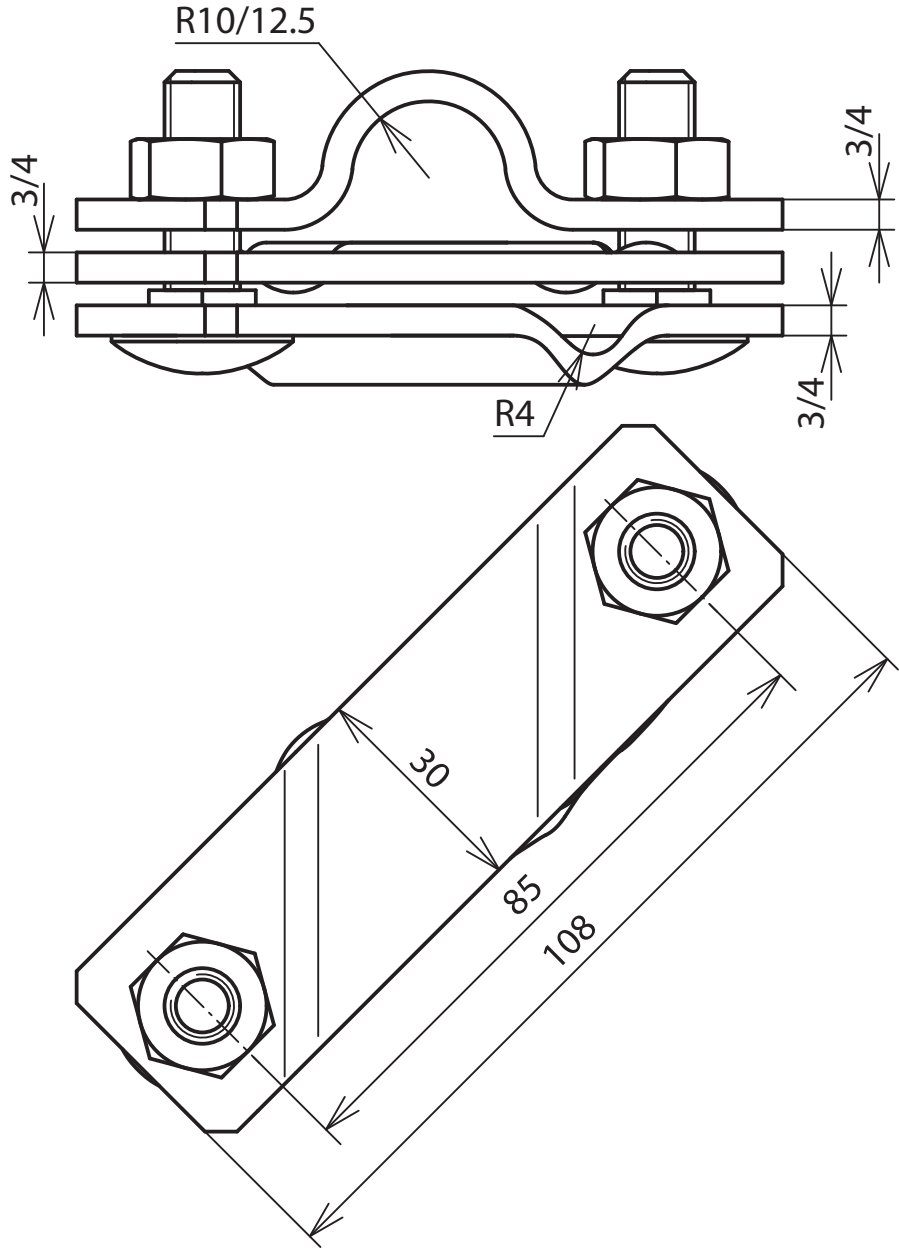
R10/12.5
3/4
3/4
3/4
R4
30
85
108