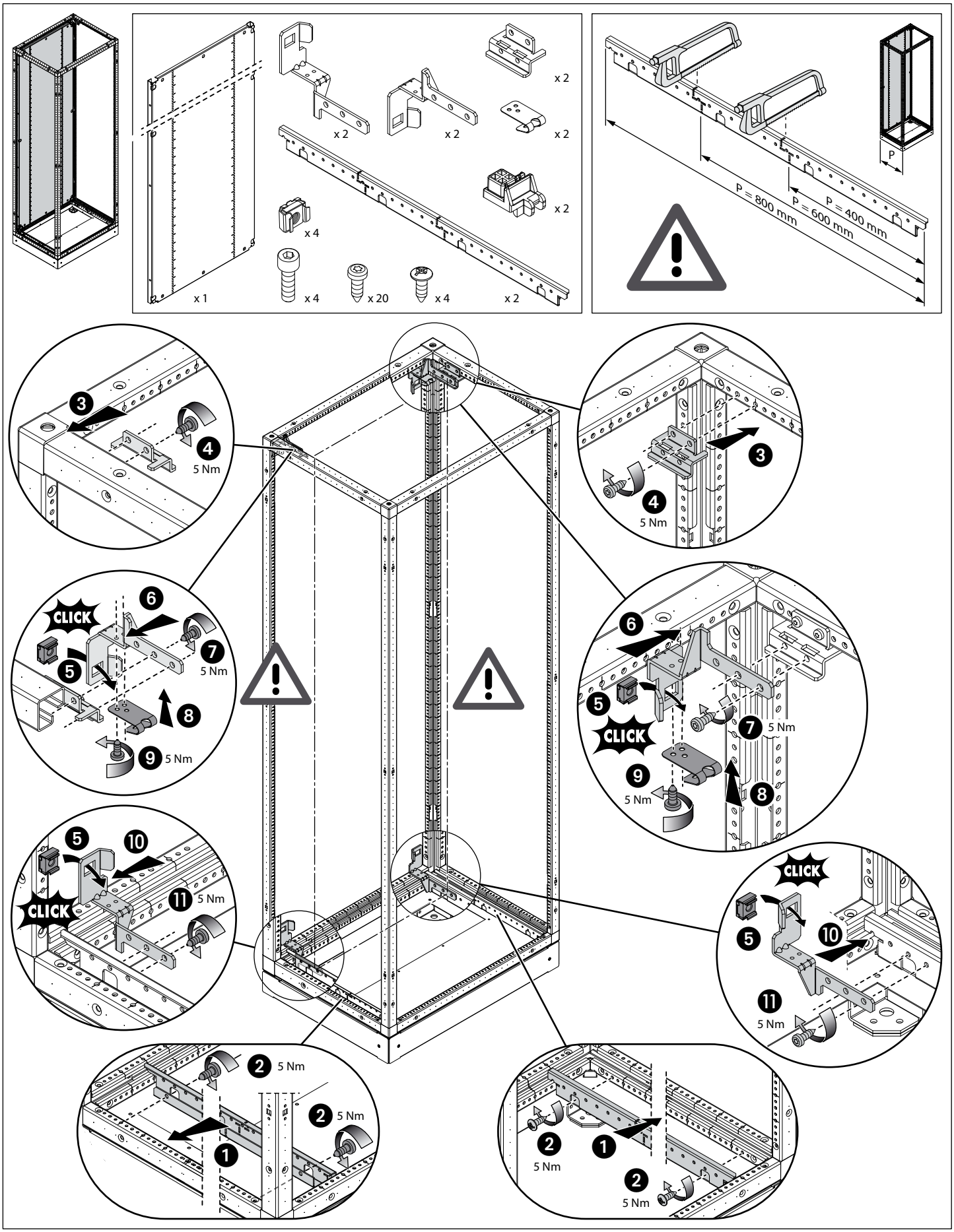
x 1
x 2
x 2
x 2
x 2
x 2
x 4
x 4
x 20
x 4
x 2
P
P = 800 mm
P = 600 mm
P = 400 mm
CLICK
5 Nm
LE09961AB

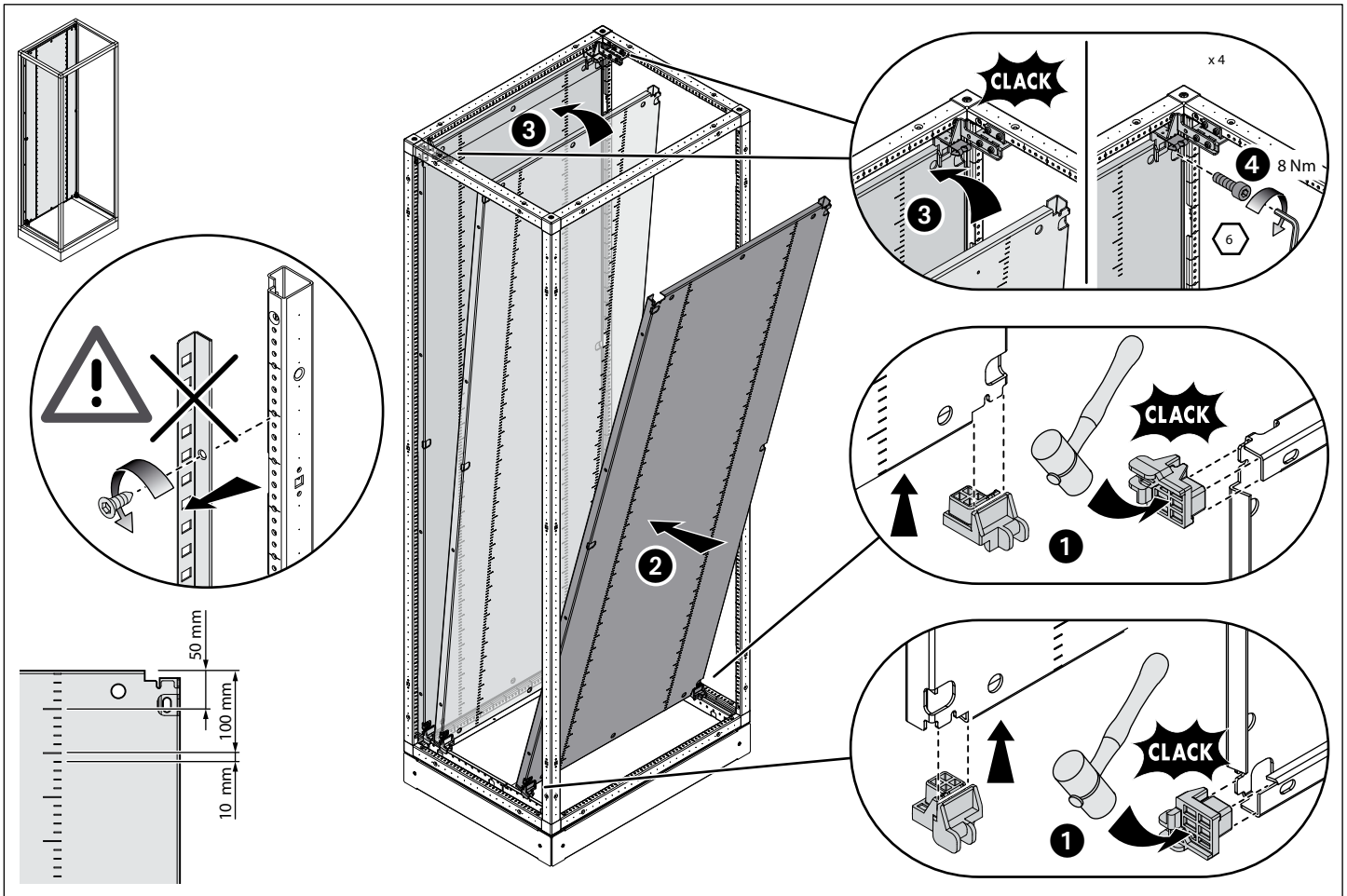
CLACK
x 4
8 Nm
6
CLACK
CLACK
50 mm
100 mm
10 mm

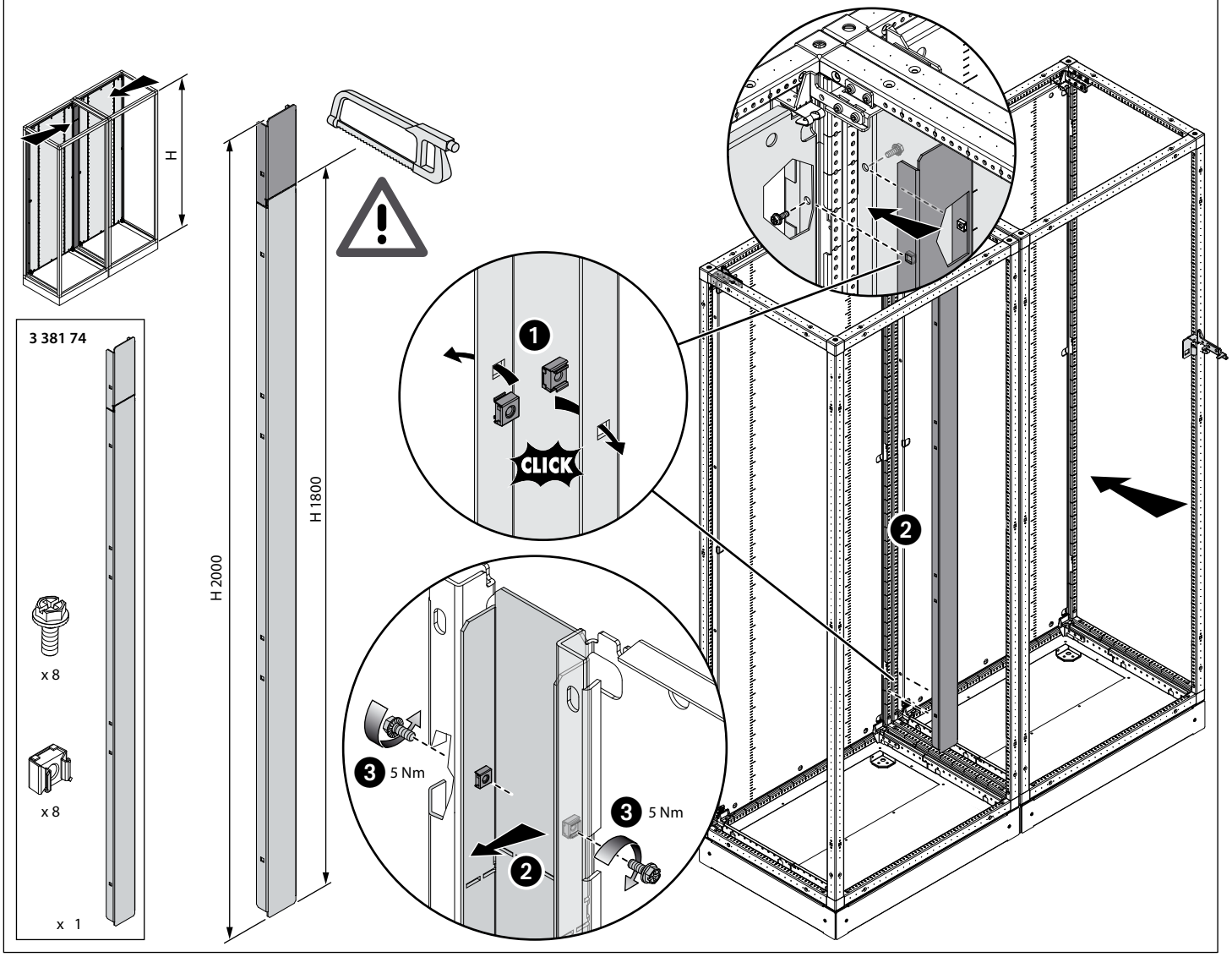
H
3 381 74
x 8
x 8
x 1
H 2000
H 1800
CLICK
5 Nm
5 Nm