legrand®

NT 104 870 324/00

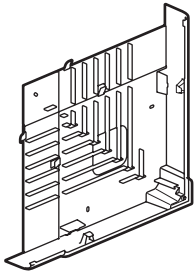

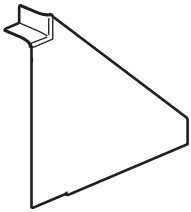

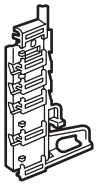

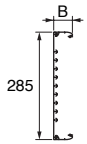
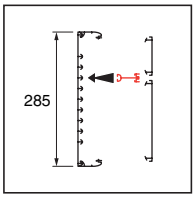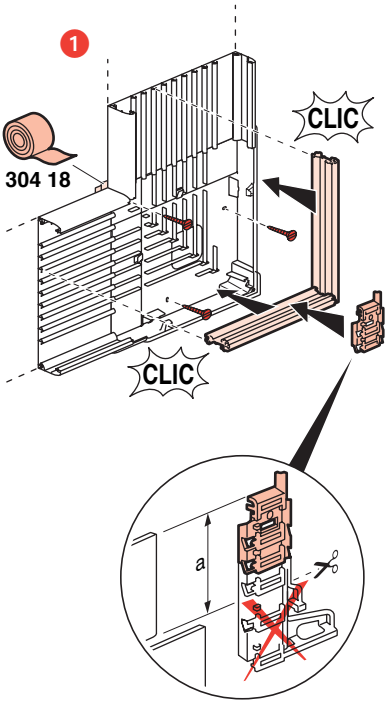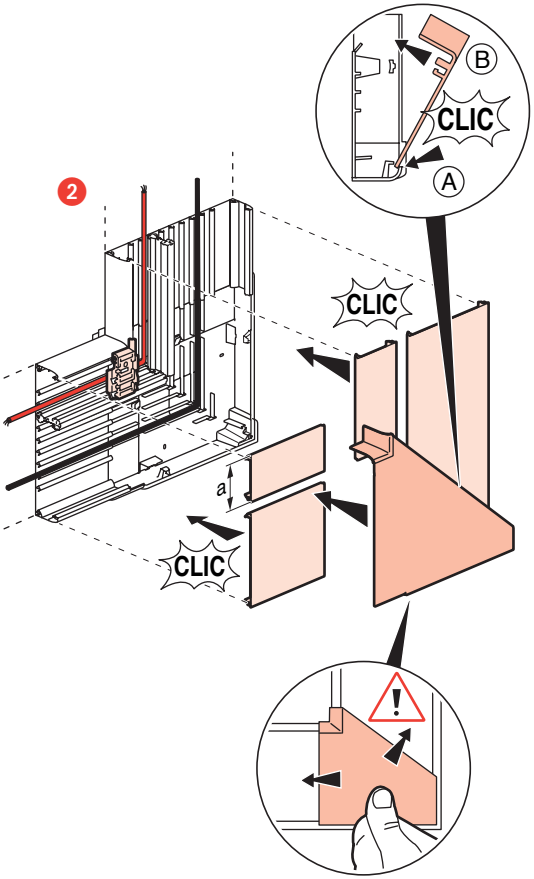
B = 35 mm	**106 71**
B = 50 mm	**106 72**
B = 65 mm	**106 74**
B = 80 mm	**106 74**