NT 104 870 251/02

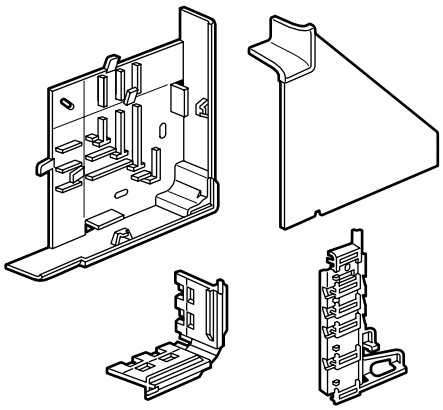

B / A	A = 60 mm	A = 80/105 mm	* A = 150 mm	* A = 150/195 mm	A = 220/285 mm
B = 35 mm	**106 41**	**106 51**		**106 61**	**106 71**
B = 50 mm	**106 42**	**106 52**	**106 55**	**106 62**	**106 72**
B = 65 mm		**106 53**		**106 63**	**106 73**
B = 80 mm		**106 54**		**106 64**	**106 74**

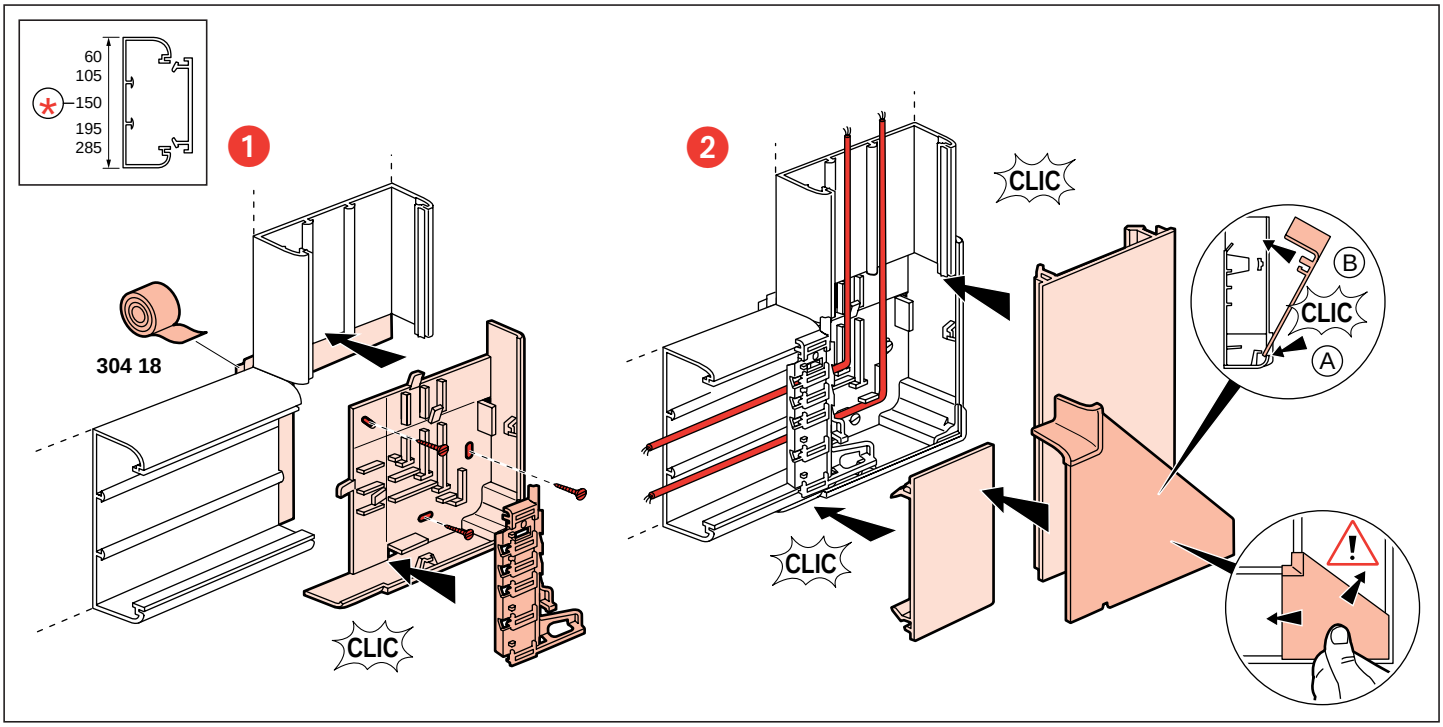

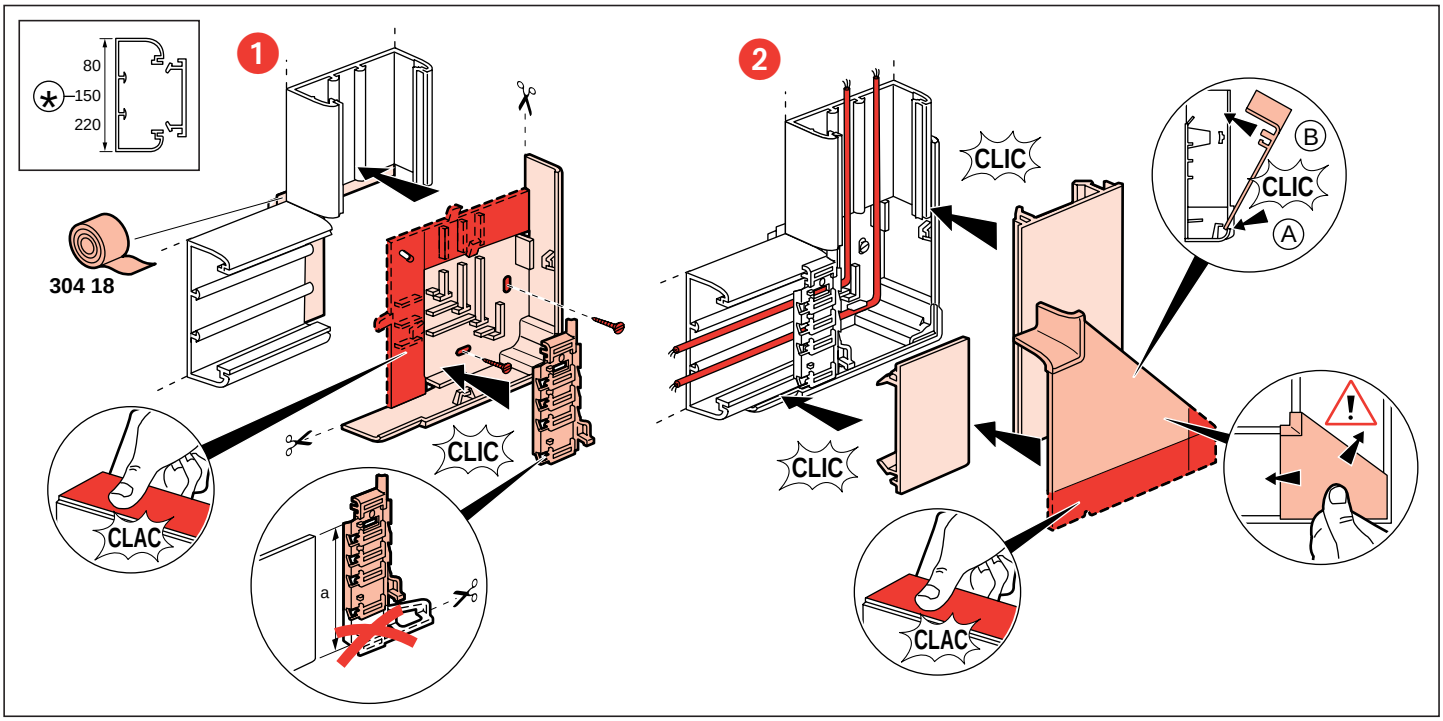

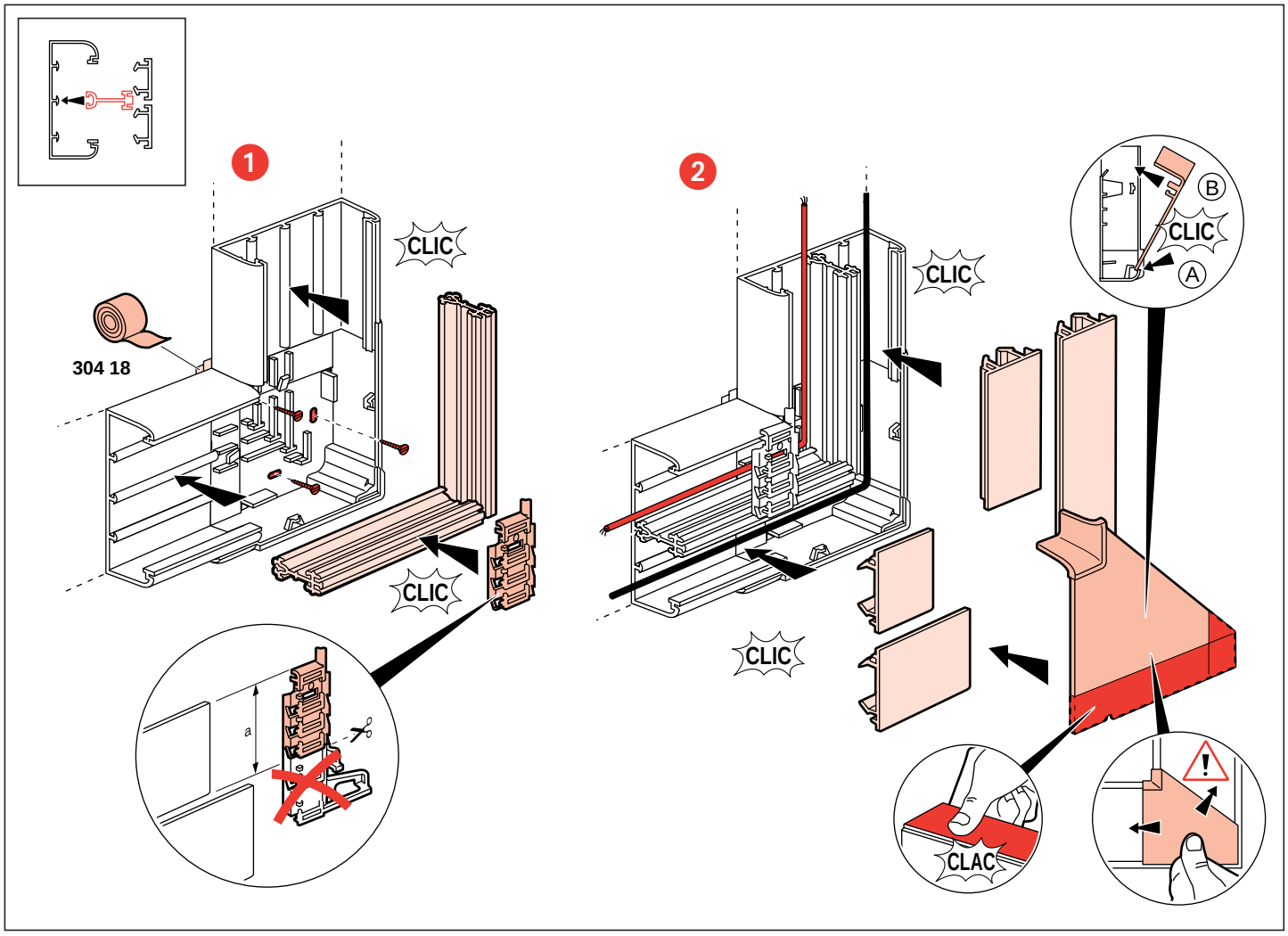
1
2
CLIC
CLIC
CLIC
CLIC
CLIC
304 18
a
B
A
CLAC

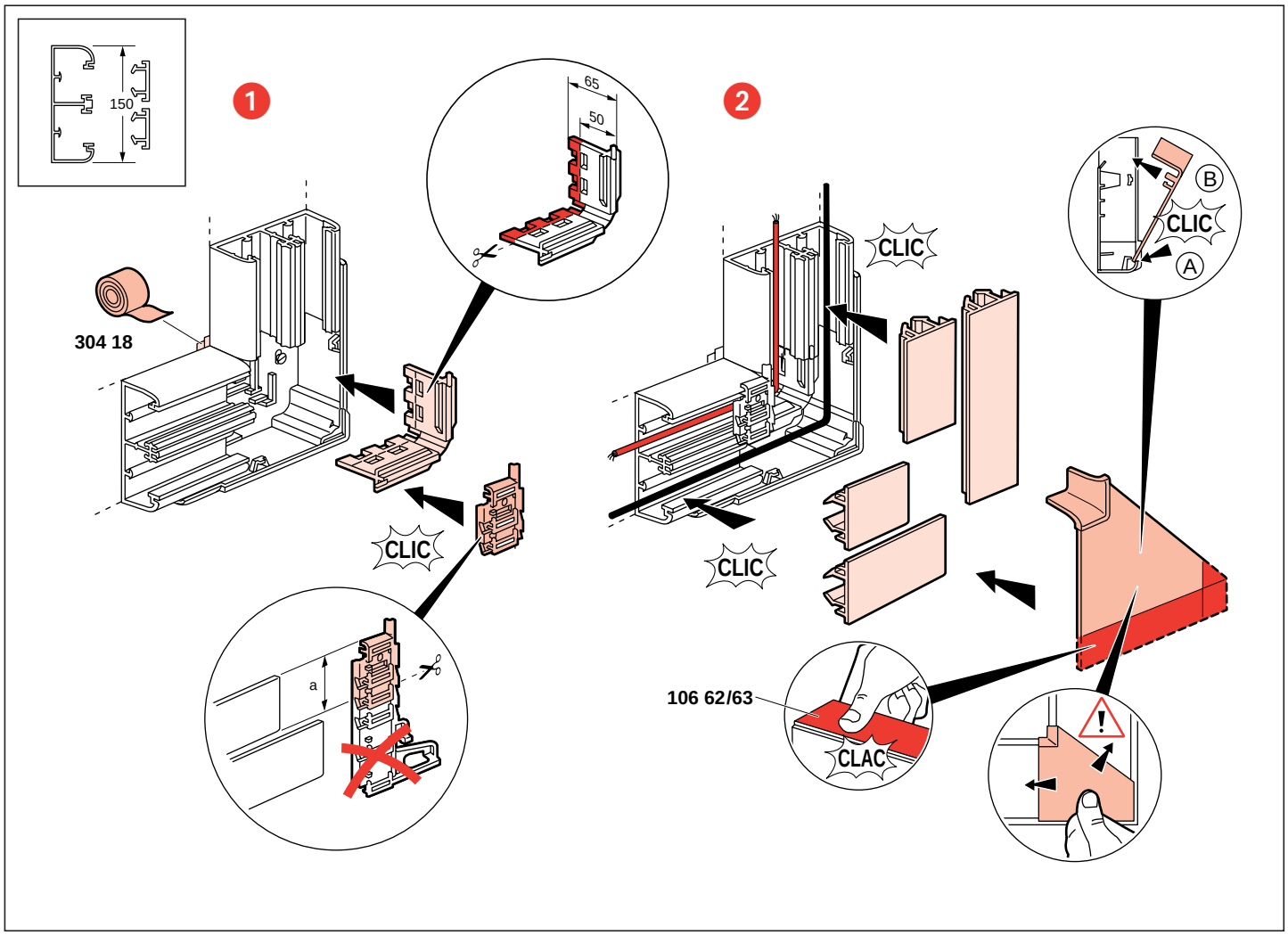
150
1
2
65
50
304 18
CLIC
CLIC
CLIC
CLIC
a
B
A
106 62/63
CLAC