320W Quad Output with PFC Function

QP-320 series

■ Features :

- Universal AC input / Full range
- Built-in active PFC function, PF>0.95
- Protections: Short circuit / Overload / Over voltage / Over temperature
- CH1 & CH2 can be adjusted from -5% ~ +10%
- With power good and fail signal output
- Built-in remote sense function for CH1 & CH2
- LED indicator for power on
- 100% full load burn-in test
- 20A peak load capability for 24V channel
- 3 years warranty

SPECIFICATION

MODEL		QP-320D				QP-320F			
OUTPUT	OUTPUT NUMBER	CH1	CH2	CH3	CH4	CH1	CH2	CH3	CH4
	DC VOLTAGE	5V	12V	24V	-12V	5V	15V	24V	-15V
	RATED CURRENT	20A	10A	3A	2A	20A	8A	3A	1.6A
	CURRENT RANGE	2.5 ~ 20A	0 ~ 10A	0.2 ~ 5A	0.2 ~ 2A	2.5 ~ 20A	0 ~ 10A	0.2 ~ 5A	0.2 ~ 1.6A
	PEAK CURRENT	20A	10A	20A,≦1ms(Note5)	2A	20A	10A	20A,≦1ms(Note5)	1.6A
	RATED POWER	316W							
	RIPPLE & NOISE (max.) Note.2	100mVp-p	150mVp-p	150mVp-p	150mVp-p	100mVp-p	150mVp-p	150mVp-p	150mVp-p
	VOLTAGE ADJ. RANGE	CH1,2:+10,-5%							
	VOLTAGE TOLERANCE Note.3	±3.0%	±3.0%	+10,-6%	±10%	±3.0%	±3.0%	+10,-6%	±10%
	LINE REGULATION	±1.0%	±2.0%	±2.0%	±3.0%	±1.0%	±2.0%	±2.0%	±3.0%
	LOAD REGULATION	±2.0%	±3.0%	±6.0%	±8.0%	±2.0%	±3.0%	±6.0%	±8.0%
	SETUP, RISE TIME	800ms, 50ms at full load							
	HOLD UP TIME (Typ.)	16ms at full load							
INPUT	VOLTAGE RANGE	90 ~ 264VAC 127 ~ 370VDC							
	FREQUENCY RANGE	47 ~ 63Hz							
	POWER FACTOR (Typ.)	PF>0.95/230VAC PF>0.98/115VAC at full load							
	EFFICIENCY (Typ.)	83%							
	AC CURRENT (Typ.)	4A/115VAC 2A/230VAC							
	INRUSH CURRENT (Typ.)	25A/115VAC 45A/230VAC							
	LEAKAGE CURRENT	<2mA / 240VAC							
PROTECTION	OVERLOAD	105 ~ 150% rated output power							
		Protection type : Fold back current limiting, recovers automatically after fault condition is removed							
	OVER VOLTAGE	CH1:5.75 ~ 6.75V CH2:13.8 ~ 16.2V				CH1:5.75 ~ 6.75V CH2:17.25 ~ 20.25V			
		Protection type : Shut down o/p voltage, re-power on to recover							
	OVER TEMPERATURE	Shut down o/p voltage, recovers automatically after temperature goes down							
FUNCTION	POWER GOOD / POWER FAIL	10ms/1ms							
ENVIRONMENT	WORKING TEMP.	-10 ~ +70℃ (Refer to "Derating Curve")							
	WORKING HUMIDITY	20 ~ 90% RH non-condensing							
	STORAGE TEMP., HUMIDITY	-20 ~ +85℃, 10 ~ 95% RH							
	TEMP. COEFFICIENT	±0.03%/℃ (0 ~ 50℃)							
	VIBRATION	10 ~ 500Hz, 2G 10min./1cycle, 60min. each along X, Y, Z axes							
SAFETY & EMC (Note 4)	SAFETY STANDARDS	UL60950-1, TUV EN60950-1 approved							
	WITHSTAND VOLTAGE	I/P-O/P:3KVAC I/P-FG:2KVAC O/P-FG:0.5KVAC							
	ISOLATION RESISTANCE	I/P-O/P, I/P-FG, O/P-FG:100M Ohms / 500VDC / 25℃/ 70% RH							
	EMC EMISSION	Compliance to EN55022 (CISPR22) Class B, EN61000-3-2,-3							
	EMC IMMUNITY	Compliance to EN61000-4-2,3,4,5,6,8,11, EN55024, light industry level, criteria A							
OTHERS	MTBF	213.5K hrs min. MIL-HDBK-217F (25℃)							
	DIMENSION	215*115*50mm (L*W*H)							
	PACKING	1.2Kg; 12pcs/15.4Kg/0.92CUFT							

NOTE

1. All parameters NOT specially mentioned are measured at 230VAC input, rated load and 25℃ of ambient temperature.
2. Ripple & noise are measured at 20MHz of bandwidth by using a 12" twisted pair-wire terminated with a 0.1uf & 47uf parallel capacitor.
3. Tolerance : includes set up tolerance, line regulation and load regulation.
4. The power supply is considered a component which will be installed into a final equipment. All the EMC tests are been executed by mounting the unit on a 360mm*360mm metal plate with 1mm of thickness. The final equipment must be re-confirmed that it still meets EMC directives. For guidance on how to perform these EMC tests, please refer to "EMI testing of component power supplies." (as available on http://www.meanwell.com)
5. Every output channel can provide up to the maximum current, but total load can't exceed the rated output power.
6. CH3(24V) peak current 20A,≦1ms, repeatable in every 100ms. CH3(24V) output must be above 16V in the period of peak current.

■ Mechanical Specification

Case No. 912I Unit:mm

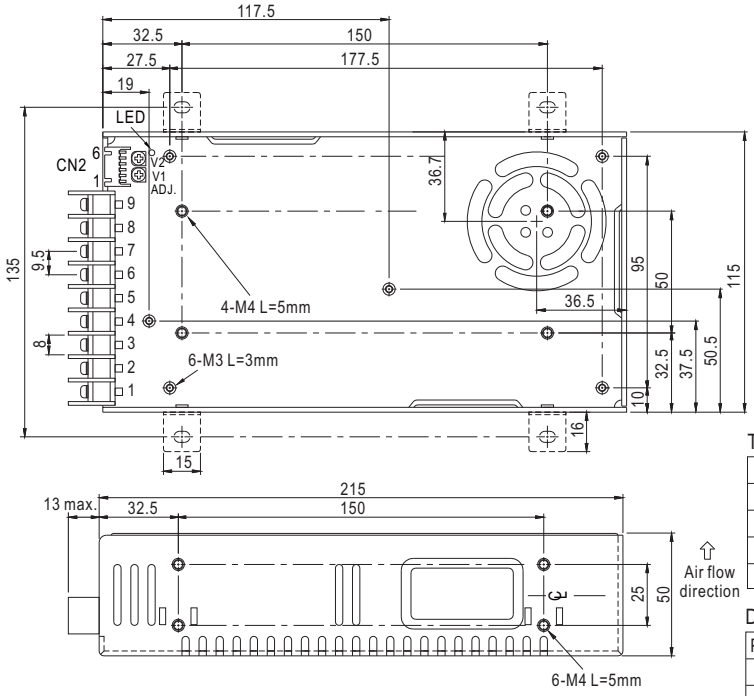

Terminal Pin No. Assignment

Pin No.	Assignment	Pin No.	Assignment
1	AC/L	5	DC OUTPUT V3
2	AC/N	6	DC OUTPUT V1
3	FG ⏚	7,8	DC OUTPUT COM
4	DC OUTPUT V4	9	DC OUTPUT V2

DC Output Connector (CN2) : JST S6B-XH-A-1 or equivalent

Pin No.	Assignment	Pin No.	Assignment	Mating Housing	Terminal
1	V1(+S)	4	V2(-S)	JST XHP or equivalent	JST SXH-001T-P0.6 or equivalent
2	V1(-S)	5	PF/PG		
3	V2(+S)	6	GND		

■ Block Diagram

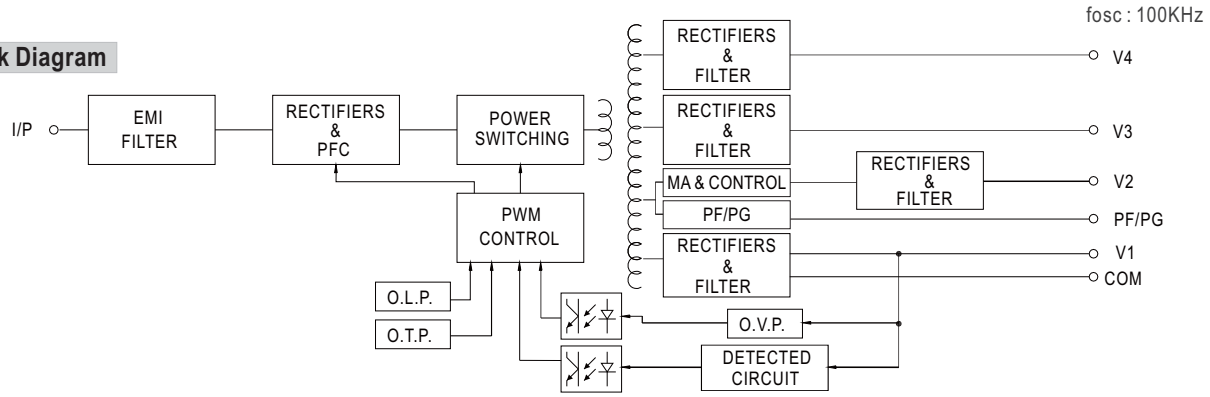

■ Derating Curve

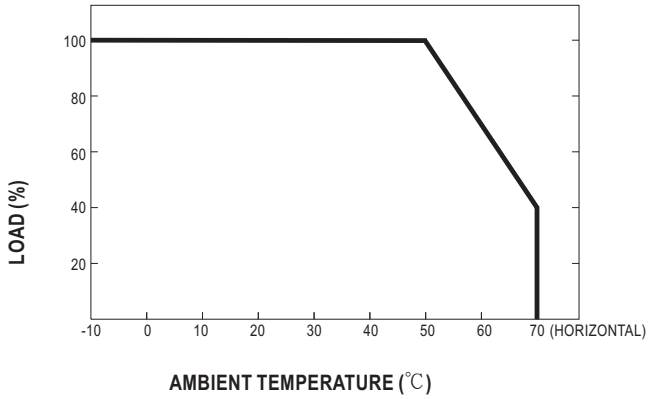
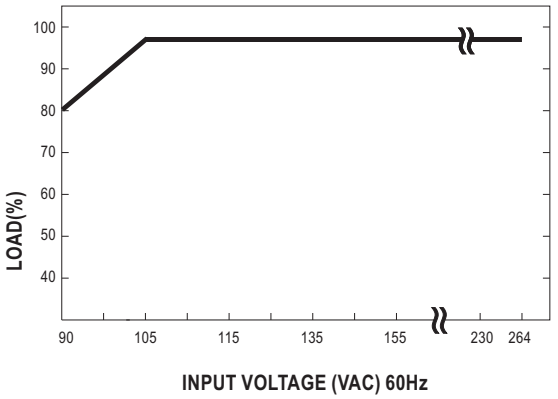
■ Output Derating VS Input Voltage