500W Slim Type with PFC Switching Supply

UHP-500 series

R33100 RoHS | GB4943 | UL60950-1 | EN60950-1 | IEC60950-1

LED Display | Automate | Industrial | Security | Network | Telecom

Features

- Slim and Low profile (31mm)
- Fanless design,500W convection
- Withstand 300VAC surge input for 5 seconds
- Built-in active PFC function
- 150% peak load capability(100ms)
- -20~+70℃ working temperature
- Protections: Short circuit / Overload / Over voltage / Over temperature
- DC OK active signal and redundant function(option)
- Operating altitude up to 5000 meter (Note.5)
- LED indicator for power on
- 3 years warranty

Applications

- Industrial automation machinery
- Industrial control system
- Mechanical and electrical equipment
- Electronic instruments, equipments or apparatus
- LED display application

Description

UHP-500 series is a 500W single-output slim type power supply with 31mm of low profile design. Adopting the full range 90~264VAC input, the entire series provides an output voltage line of 4.2V, 5V, 12V, 15V, 24V, 36V and 48V. In addition to the high efficiency up to 95%, that the whole series operates from -20℃ ~ 70℃ under air convection without fan. UHP-500 has the complete protection functions and 5G anti-vibration capability ; It is complied with the international safety regulations such as TUV EN60950-1, UL60950-1 and GB4943. UHP-500 series serves as a high performance power supply solution for various industrial applications.

Model Encoding

UHP - 500 □ - 5

- 5 — Output Voltage
- □ — Blank / R
- 500 — Rated wattage
- UHP — Series name

Type	Description	Note
Blank	Enclosed	In Stock
R	Buit-in DC OK active signal and redundant function.	By request

SPECIFICATION

MODEL		UHP-500□-4.2	UHP-500□-5	UHP-500□-12	UHP-500□-15	UHP-500□-24	UHP-500□-36	UHP-500□-48
OUTPUT	DC VOLTAGE	4.2V	5V	12V	15V	24V	36V	48V
	RATED CURRENT	80A	80A	41.7A	33.4A	20.9A	13.9A	10.45A
	RATED POWER(convection)	336W	400W	500.4W	501W	501.6W	500.4W	501.6W
	RIPPLE & NOISE (max.) Note.2	200mVp-p	200mVp-p	200mVp-p	200mVp-p	240mVp-p	360mVp-p	360mVp-p
	VOLTAGE ADJ. RANGE	3.6~4.4V	4.5~5.5V	11.4~12.6V	14.3~15.8V	22.8~25.2V	34.2~37.8V	45.6~50.4V
	VOLTAGE TOLERANCE Note.3	±2.0%	±2.0%	±1.0%	±1.0%	±1.0%	±1.0%	±1.0%
	LINE REGULATION	±0.5%	±0.5%	±0.3%	±0.3%	±0.3%	±0.3%	±0.3%
	LOAD REGULATION	±1.0%	±1.0%	±0.5%	±0.5%	±0.5%	±0.5%	±0.5%
	SETUP, RISE TIME	1000ms, 50ms/230VAC 1000ms,50ms/115VAC at full load						
	HOLD UP TIME (Typ.)	12ms/230VAC 12ms/115VAC						
INPUT	VOLTAGE RANGE Note.4	90 ~ 264VAC 127 ~ 370VDC						
	FREQUENCY RANGE	47 ~ 63Hz						
	POWER FACTOR (Typ.)	PF≥0.95/230VAC PF≥0.98/115VAC at full load						
	EFFICIENCY (Typ.)	89%	90%	94%	94%	94.5%	95%	95%
	AC CURRENT (Typ.)	4.85A/115VAC 2.6A/230VAC						
	INRUSH CURRENT (Typ.)	Cold start 30A/115VAC 60A/230VAC						
	LEAKAGE CURRENT	<0.75mA / 240VAC						
PROTECTION	OVERLOAD	110~140% rated output power						
		Protection type : Hiccup mode, recovers automatically after fault condition is removed						
	OVER VOLTAGE	4.62 ~ 5.46V	5.75 ~ 6.75V	13.2 ~ 15.6V	16.5 ~ 19.5V	26.4 ~ 31.2V	39.6 ~46.8V	52.8 ~ 62.4V
		Protection type :Shut down O/P voltage,re-power on to recover						
	OVER TEMPERATURE	Protection type :Shut down O/P voltage, recovers automatically after temperature goes down						
FUNCTION	DC OK SIGNAL(Optional)	Contact rating(max.):30Vdc/1A resistive load						
	REDUNDANT(Optional)	For parallel connection protection:For parallel applications, when one PSU can not work , the another one will be automatically enabled. This can prevent the system crash, and provide the reliability of system						
ENVIRONMENT	WORKING TEMP.	-20 ~ +70℃ (Refer to "Derating Curve")						
	WORKING HUMIDITY	20 ~ 95% RH non-condensing						
	STORAGE TEMP., HUMIDITY	-40 ~ +85℃ , 10 ~ 95% RH non-condensing						
	TEMP. COEFFICIENT	±0.03%/℃ (0 ~ 50℃)						
	VIBRATION	10 ~ 500Hz, 5G 10min./1cycle, 60min. each along X, Y, Z axes						
SAFETY & EMC (Note.6)	SAFETY STANDARDS	UL60950-1,TUV EN60950-1, CCC GB4943, BSMI CNS14336-1, EAC TP TC 004 approved;Design refer to EN60335-1,EN61558-2-16						
	WITHSTAND VOLTAGE	I/P-O/P:3.75KVAC I/P-FG:2KVAC O/P-FG:1.25KVAC						
	ISOLATION RESISTANCE	I/P-O/P, I/P-FG,O/P-FG:100M Ohms/500VDC/25℃/ 70%RH						
	EMC EMISSION	Compliance to EN55032,GB/T9254,Class B, EN61000-3-2,-3, BSMI CNS13438, EAC TP TC 020						
	EMC IMMUNITY	Compliance to EN61000-4-2,3,4,5,6,8,11;EN61000-6-2 (EN50082-2), heavy industry level ,criterial A,EAC TP TC 020						
OTHERS	MTBF	168K hrs min. MIL-HDBK-217F (25℃)						
	DIMENSION	232*81*31mm (L*W*H)						
	PACKING	0.905kg; 16pcs/15.48kg/0.82CUFT						

NOTE

1. All parameters NOT specially mentioned are measured at 230VAC input, rated load and 25℃ of ambient temperature.
2. Ripple & noise are measured at 20MHz of bandwidth by using a 12" twisted pair-wire terminated with a 0.1uf & 47uf parallel capacitor.
3. Tolerance :includes set up tolerance, line regulation and load regulation.
4. Derating may be needed under low input voltages. Please check the derating curve for more details.
5. The ambient temperature derating of 3.5℃/1000m is needed for operating altitude greater than 2000m(6500ft)
6. The power supply is considered a component which will be installed into a final equipment. The final equipment must be re-confirmed that it still meets EMC directives. For guidance on how to perform these EMC tests, please refer to "EMI testing of component power supplies." (as available on http://www.meanwell.com)

Block Diagram

PFC fosc:60KHz
PWM fosc:65KHz~75KHz

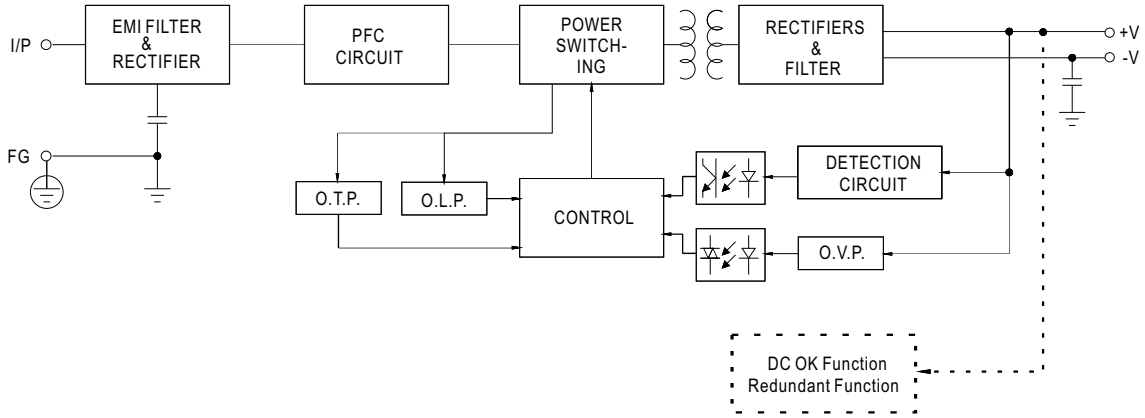

Derating Curve

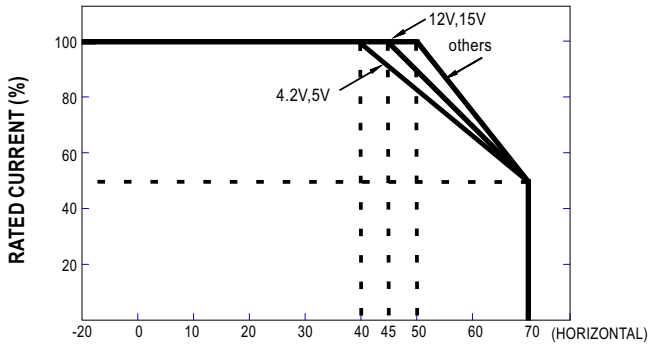

AMBIENT TEMPERATURE (℃)

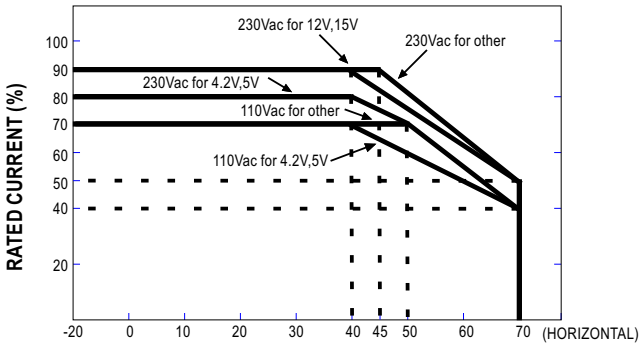

AMBIENT TEMPERATURE WITHOUT ALUMINUM PLATE(℃)

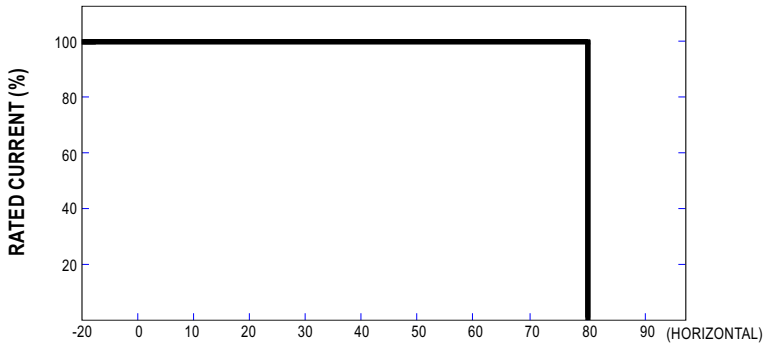

Tcase (℃)

■ STATIC CHARACTERISTIC

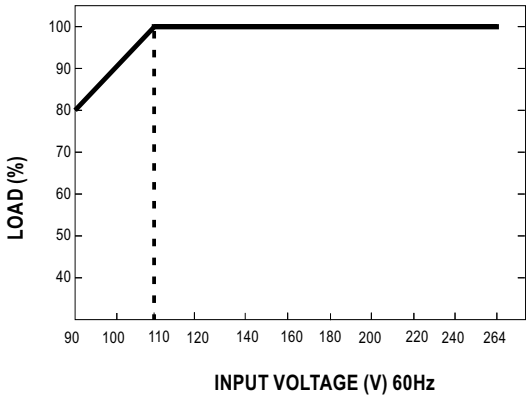

■ DC OK Relay Contact

Contact Close	PSU turns on/DC ok
Contact Open	PSU turns off/DC fail
Contact Rating(max.)	30Vdc/1A resistive load

■ Redundant function

(1) UHP-500R is built-in redundant function and can be connected 2 units in parallel .

(2) When in parallel operation the maximum load should not be greater than the rated power of any PSU.

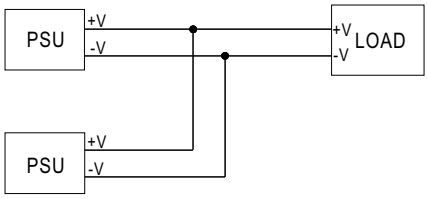

■ Mechanical Specification

CASE NO.:233D Unit:mm

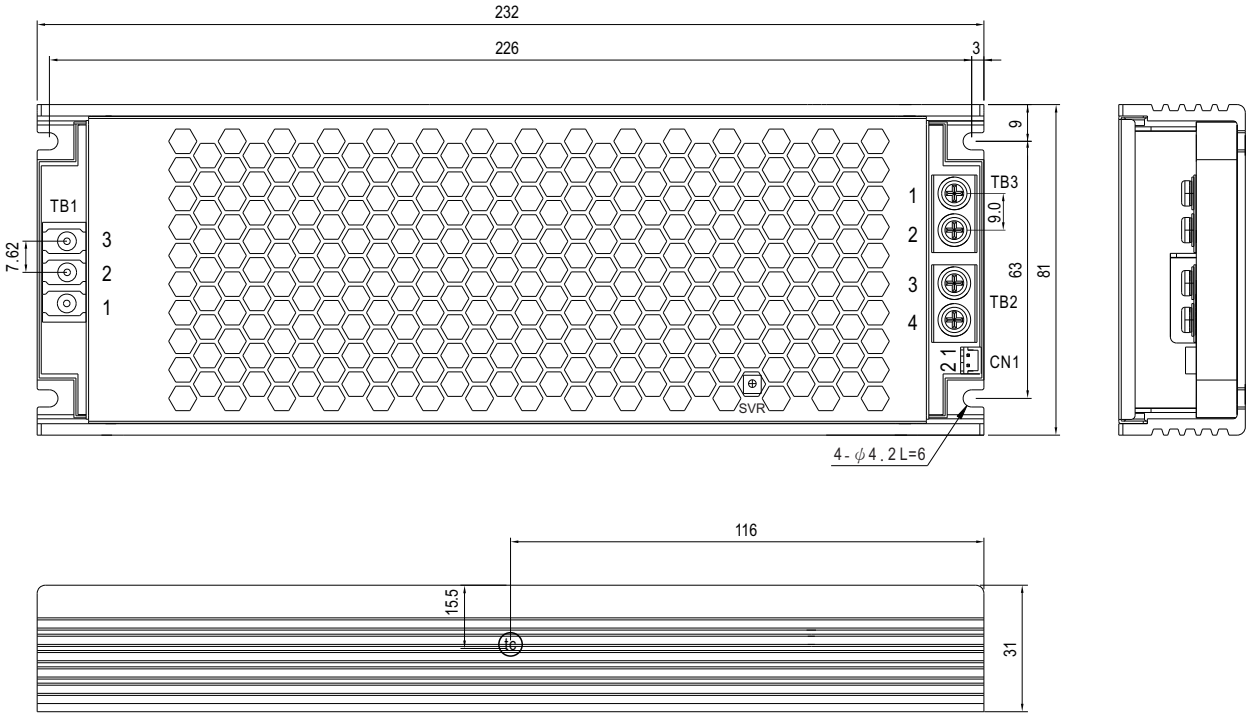

• ⓣⓒ : Max. Case Temperature

AC Input Terminal(TB1) pin NO. Assignment

Pin No.	Assignment	Terminal	Max mounting torque
1	AC/L	(DEGSON) DG28C-B-03P	5Kgf-cm
2	AC/N		
3	⏚		

DC Output Terminal(TB2,TB3) pin NO. Assignment

Pin No.	Assignment	Terminal	Max mounting torque
1,2	-V	(MW) MEL-400-02P	8Kgf-cm
3,4	+V		

DC OK Connector(CN1):JST B2B-PH-K-S or requivalent

Pin No.	Assignment	Mating Housing	Terminal
1	DC COM1	JST PHR-2 or requivalent	JST SPH-002T-P0.5S or requivalent
2	DC COM2		

■ Installation

1.Operate with additional aluminum plate

In order to meet the"Derating Curve"and the "Static Characteristics" ,UHP-500 series must be installed onto an aluminum plate(or the cabinet of the same size) on the bottom.The size of the suggested aluminum plate is shown as below. And for optimizing thermal performance, the aluminum plate must have an even and smooth surface (or coated with thermal grease), and UHP-500 series must be firmly mounted at the center of the aluminum plate.
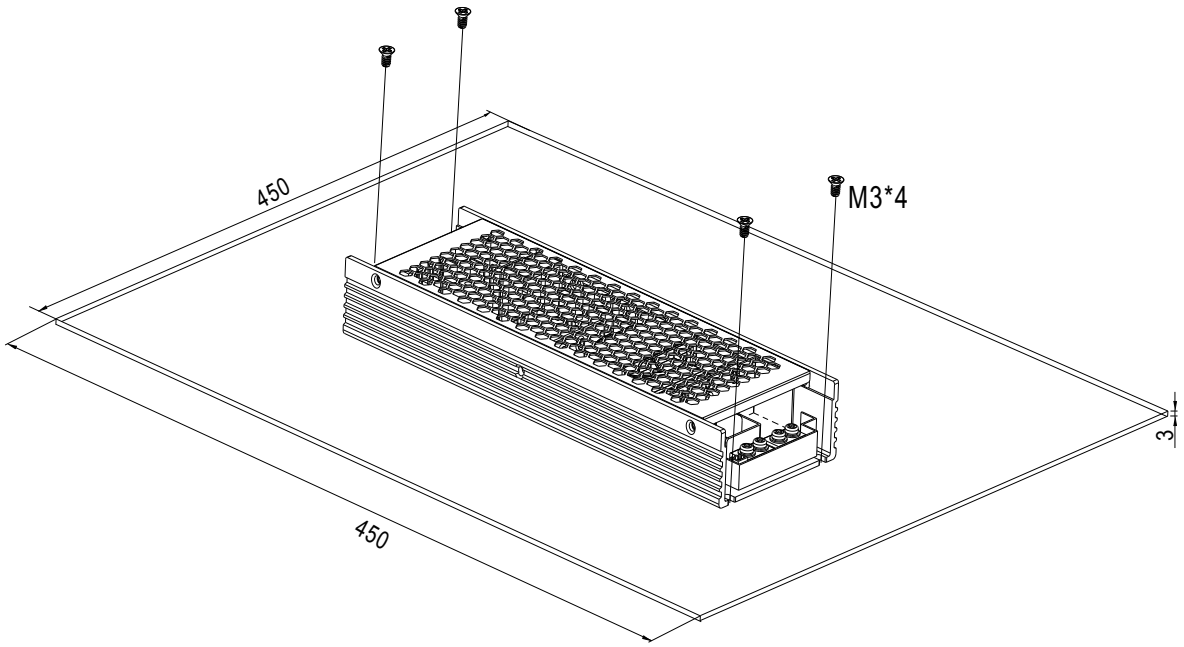
unit:mm