65W Single Output Switching Power Supply

EPS-65 series

■ Features :

- Universal AC input / Full range
- Optional L-Bracket and cover
- High efficiency up to 90%
- Protections: Short circuit / Overload / Over voltage
- Cooling by free air convection
- 4"×2" compact size
- LED indicator for power on
- No load power consumption<0.3W
- 3 years warranty

EPS-65-3.3 [-C] [ ] =Blank,-C ; Blank=PCB only, -C=Enclosed type

SPECIFICATION

MODEL		EPS-65-3.3□	EPS-65-5□	EPS-65-7.5□	EPS-65-12□	EPS-65-15□	EPS-65-24□	EPS-65-36□	EPS-65-48□
OUTPUT	DC VOLTAGE	3.3V	5V	7.5V	12V	15V	24V	36V	48V
	RATED CURRENT	11A	11A	8A	5.42A	4.34A	2.71A	1.81A	1.36A
	CURRENT RANGE	0 ~ 12A	0 ~ 12A	0 ~ 8.8A	0 ~ 6A	0 ~ 4.8A	0 ~ 3A	0 ~ 2A	0 ~ 1.5A
	RATED POWER	36.3W	55W	60W	65.04W	65.1W	65.04W	65.16W	65.28W
	PEAK LOAD(10sec.) Note.6	39.6W	60W	66W	72W	72W	72W	72W	72W
	RIPPLE & NOISE (max.) Note.2	80mVp-p	80mVp-p	100mVp-p	120mVp-p	150mVp-p	240mVp-p	280mVp-p	300mVp-p
	VOLTAGE ADJ. RANGE	3.1 ~ 3.6V	4.75 ~ 5.5V	7.13 ~ 8.25V	10.8 ~ 13.5V	13.5 ~ 16.5V	21.6 ~ 27V	32.4 ~ 39.6V	43.2 ~ 52.8V
	VOLTAGE TOLERANCE Note.3	±3.0%	±2.0%	±2.0%	±2.0%	±2.0%	±1.0%	±1.0%	±1.0%
	LINE REGULATION	±0.5%	±0.5%	±0.5%	±0.5%	±0.5%	±0.5%	±0.5%	±0.5%
	LOAD REGULATION	±2.0%	±1.0%	±1.0%	±1.0%	±1.0%	±1.0%	±1.0%	±1.0%
	SETUP, RISE TIME	1000ms, 50ms/230VAC 2000ms, 50ms/115VAC at full load							
	HOLD UP TIME (Typ.)	50ms/230VAC 12ms/115VAC at full load							
INPUT	VOLTAGE RANGE Note.5	90 ~ 264VAC 127 ~ 370VDC [DC input operation possible by connecting AC/N(+), AC/L(-)]							
	FREQUENCY RANGE	47 ~ 63Hz							
	EFFICIENCY (Typ.)	80%	82%	84%	86%	87%	88%	89%	90%
	AC CURRENT (Typ.)	1.8A/115VAC 1 A/230VAC							
	INRUSH CURRENT (Typ.)	COLD START 60A/230VAC							
	LEAKAGE CURRENT	<2mA/240VAC							
PROTECTION	OVER LOAD	115 ~ 160% rated output power							
		Protection type : Hiccup mode, recovers automatically after fault condition is removed							
	OVER VOLTAGE	3.7 ~ 4.45V	5.6 ~ 6.75V	8.63 ~ 10.1V	13.8 ~ 16.2V	17.25 ~ 20.25V	27.6 ~ 32.4V	39.7 ~ 46.8V	53.3 ~ 64.8V
		Protection type : Shut down o/p voltage, re-power on to recover							
ENVIRONMENT	WORKING TEMP.	-30 ~ +70℃ (Refer to output load derating curve)							
	WORKING HUMIDITY	20 ~ 90% RH non-condensing							
	STORAGE TEMP., HUMIDITY	-40 ~ +85℃, 10 ~ 95% RH							
	TEMP. COEFFICIENT	±0.03%/℃(0 ~ 50℃)							
	VIBRATION	10 ~ 500Hz, 2G 10min./1cycle, period for 60min. each along X, Y, Z axes							
SAFETY & EMC (Note 4)	SAFETY STANDARDS	UL60950-1, TUV EN60950-1 approved							
	WITHSTAND VOLTAGE	I/P-O/P:3KVAC I/P-FG:2KVAC O/P-FG:0.5KVAC							
	ISOLATION RESISTANCE	I/P-O/P, I/P-FG, O/P-FG:100M Ohms / 500VDC / 25℃/ 70% RH							
	EMC EMISSION	Compliance to EN55022 (CISPR22) Class B, EN61000-3-2,-3							
	EMC IMMUNITY	Compliance to EN61000-4-2,3,4,5,6,8,11, EN55024, heavy industry level, criteria A							
OTHERS	MTBF	563Khrs min. MIL-HDBK-217F (25℃)							
	DIMENSION	PCB:101.6*50.8*29mm (L*W*H) ; with optional CASE:103.4*62*37mm (L*W*H)							
	PACKING	PCB: 0.15Kg; 96pcs/ 15.4 Kg/0.89CUFT ; with optional CASE: 0.3Kg; 45pcs/ 14.5Kg/0.67CUFT							

NOTE

1. All parameters NOT specially mentioned are measured at 230VAC input, rated load and 25℃of ambient temperature.
2. Ripple & noise are measured at 20MHz of bandwidth by using a 12" twisted pair-wire terminated with a 0.1uf & 47uf parallel capacitor.
3. Tolerance : includes set up tolerance, line regulation and load regulation.
4. The power supply is considered a component which will be installed into a final equipment. The final equipment must be re-confirmed that it still meets EMC directives.
5. Derating may be needed under low input voltage. Please check the static characteristics for more details.
6. 33% Duty cycle maximum within every 30 seconds. Average output power should not exceed the rated power.

■ Mechanical Specification

Unit:mm

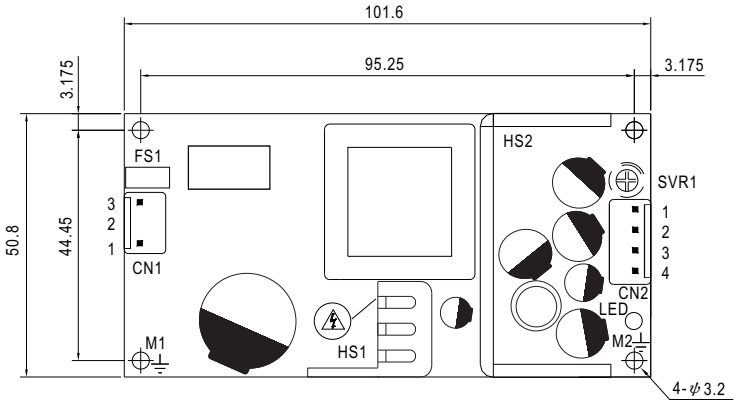

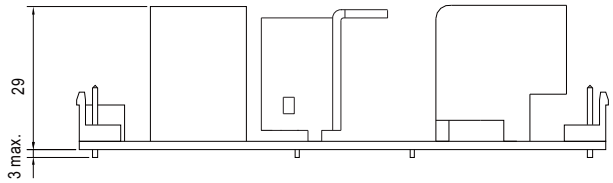

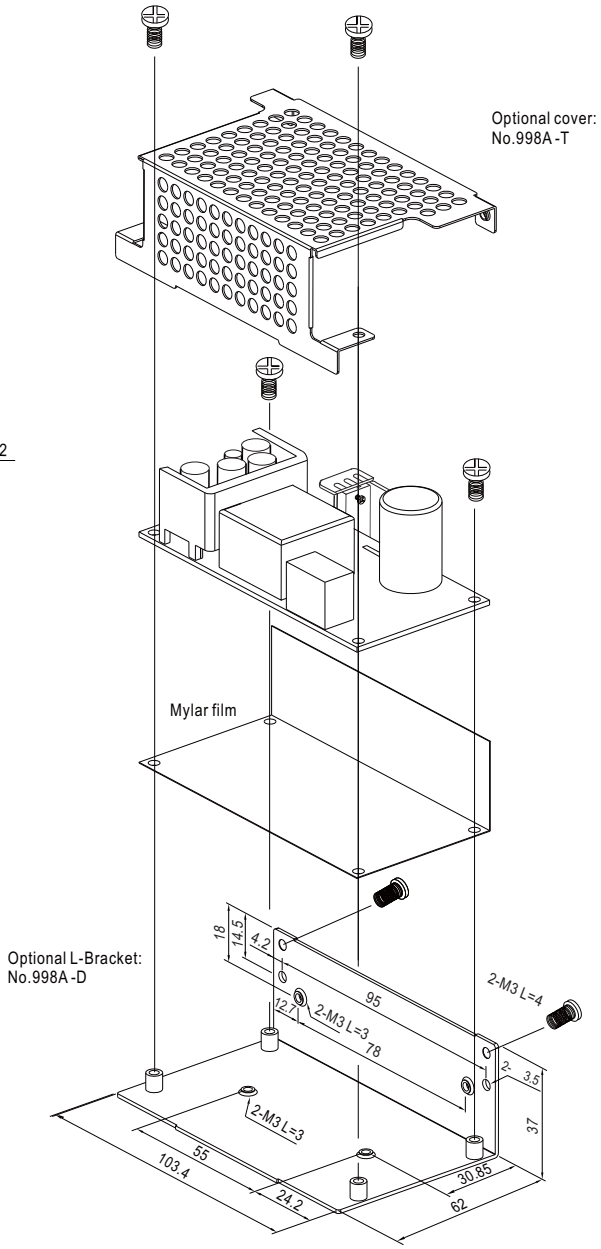

⚠
1.HS1,HS2 cannot be shorted.
2.HS1 must have safety isolation distance with system case.

AC Input Connector (CN1) : JST B3P-VH or equivalent

Pin No.	Assignment	Mating Housing	Terminal
1	AC/N	JST VHR or equivalent	JST SVH-21T-P1.1 or equivalent
2	No Pin		
3	AC/L		

DC Output Connector (CN2) : JST B4P-VH or equivalent

Pin No.	Assignment	Mating Housing	Terminal
1,2	+V	JST VHR or equivalent	JST SVH-21T-P1.1 or equivalent
3,4	-V		

⏚ : Grounding Required ;M1 and M2 are Safety ground and should all be grounded

■ Block Diagram

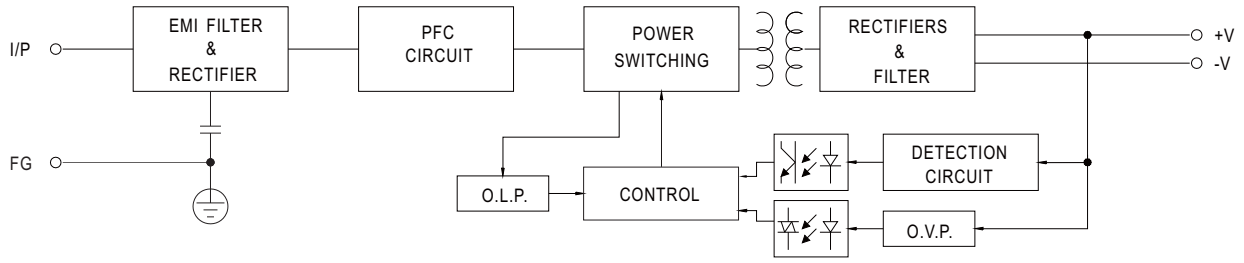

Output Derating

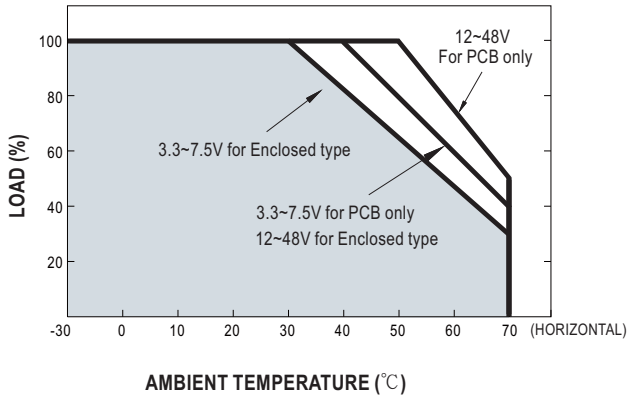
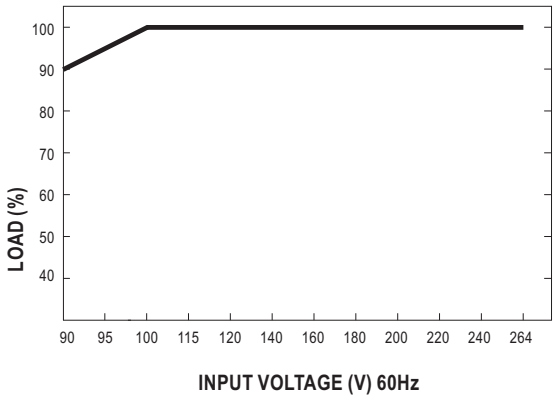
Static Characteristics