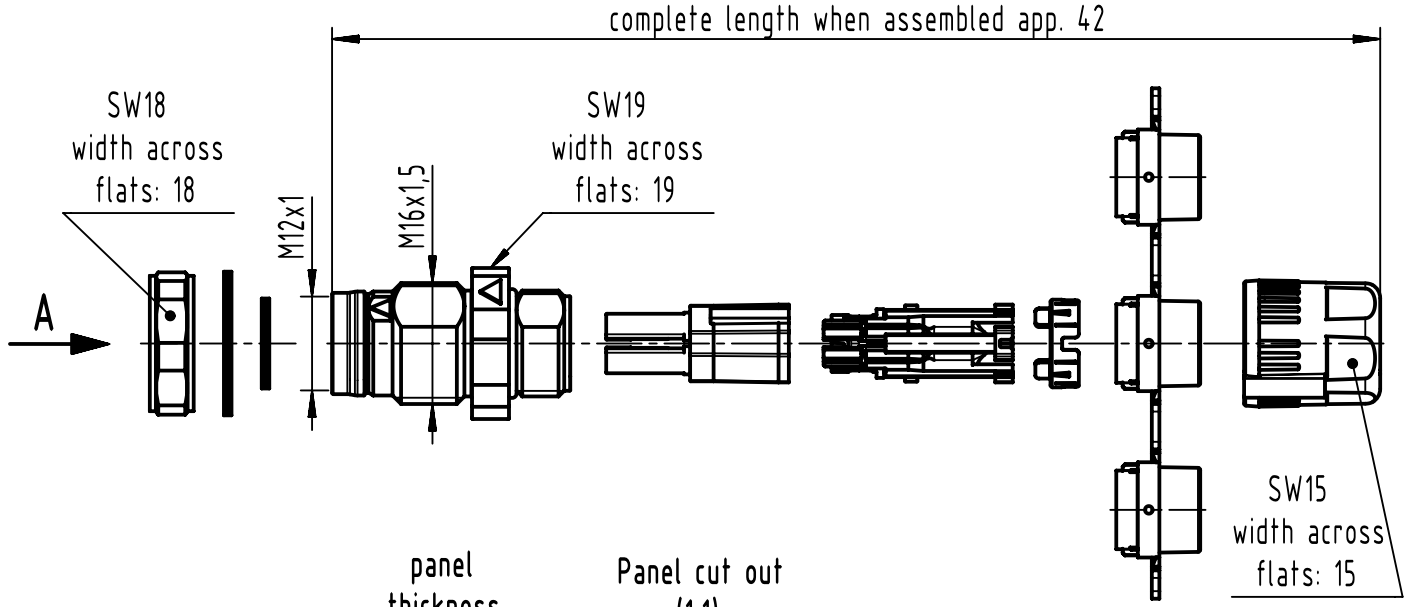

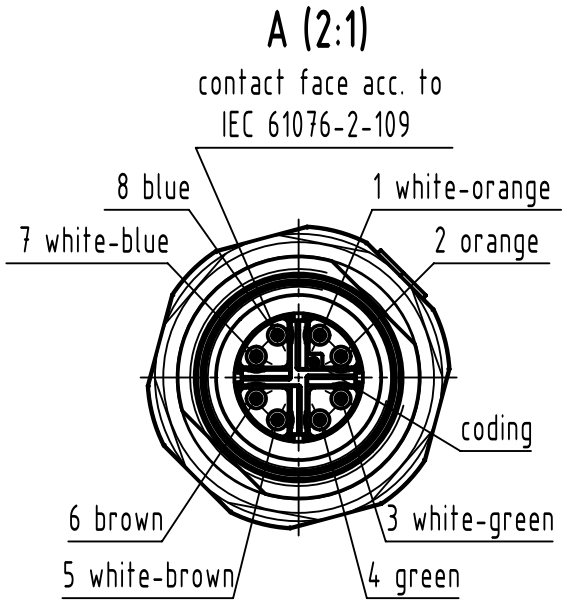

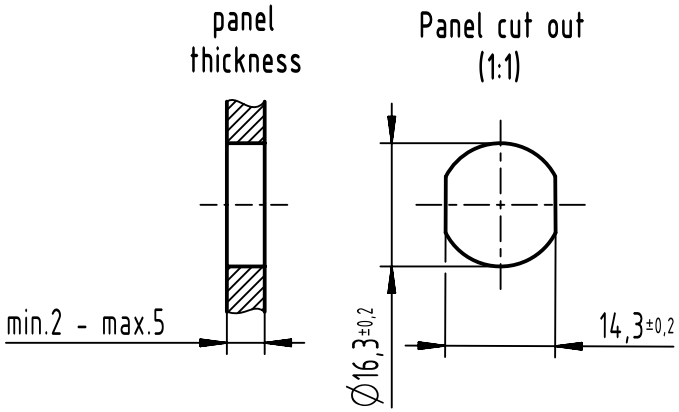

recommended torque of counter nut: 2Nm
order contacts separately

cable Ø			wire gauge	part-no.
5,7 - 6,9mm	6,5 - 7,7mm	7,5 - 8,8mm		
sealing			AWG 28-24	21 01 100 9023
A	B	C	AWG 26-23	21 01 100 9021

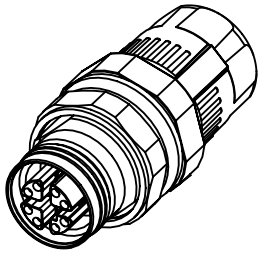

All Dimensions in mm
Original Size DIN A4

Scale 1:1 | Free size tol. | Ref. | Sub.

All rights reserved

Department EL PD

HARTING
D-32339 Espelkamp

Created by	Inspected by	Standardisation	Date	State
SERBANA	FARCASIU	ROEBEN	2024-02-12	Final Release

Title: PFT Slim design female X-coded

Doc-Key / ECM-Nr.: 100622656/UGD/001/M 500000263288

Type: TB | Number: 21038812825 | Rev.: M | Page: 1/1

A4