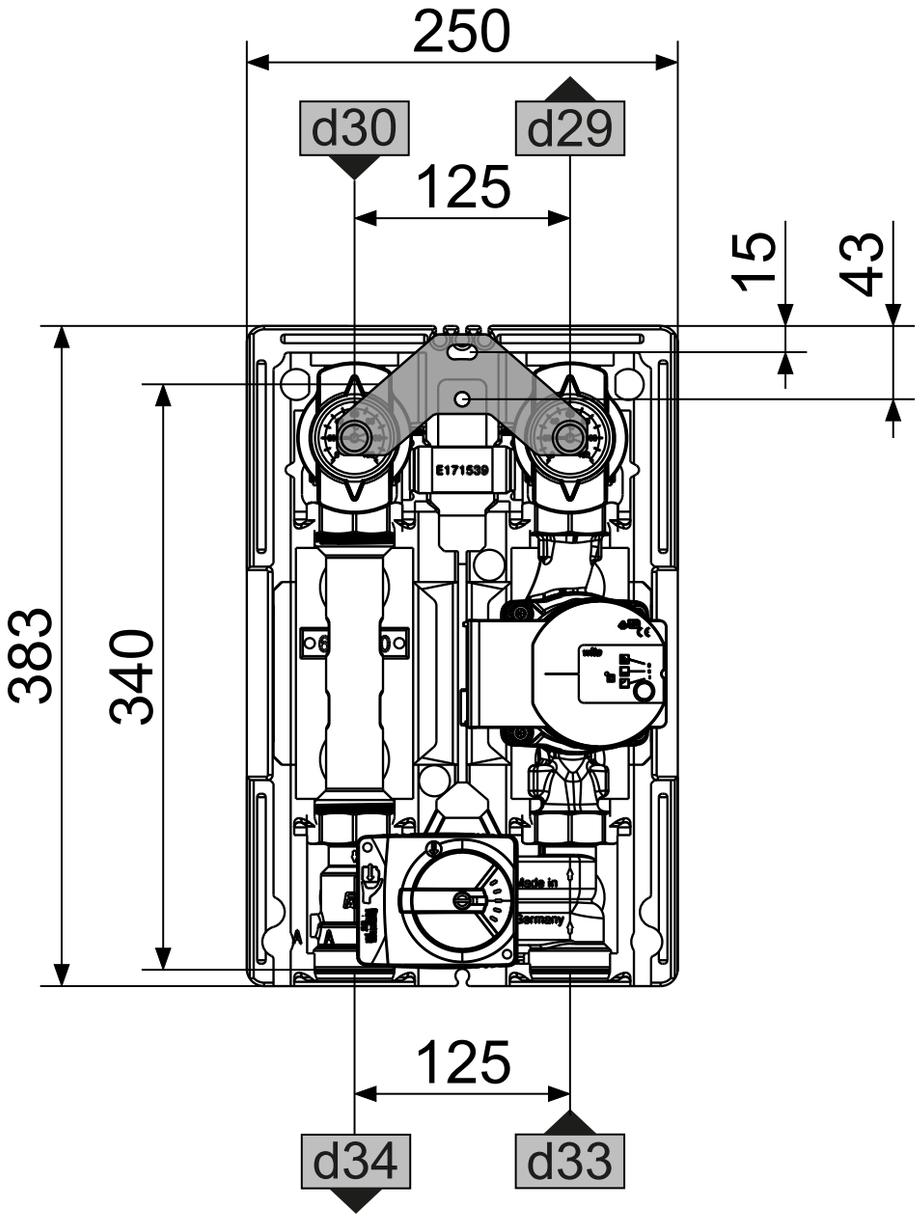
250
d30
d29
125
15
43
383
340
E171539
Made in
Germany
125
d34
d33

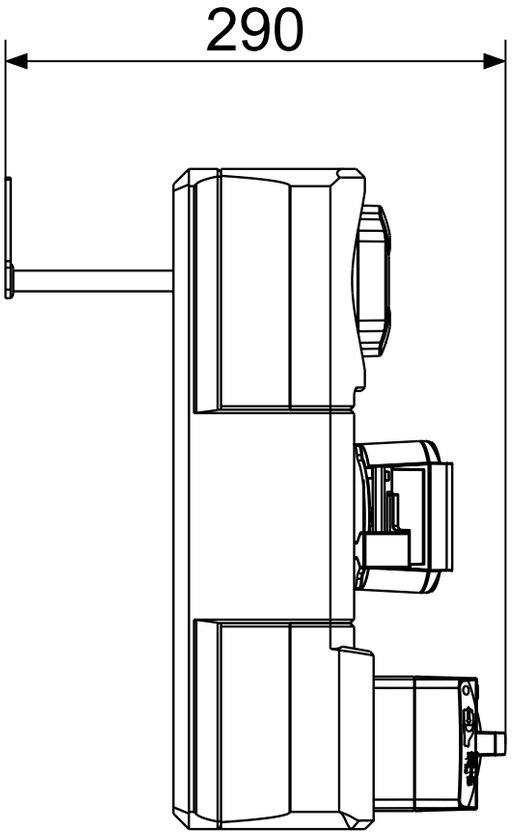
290

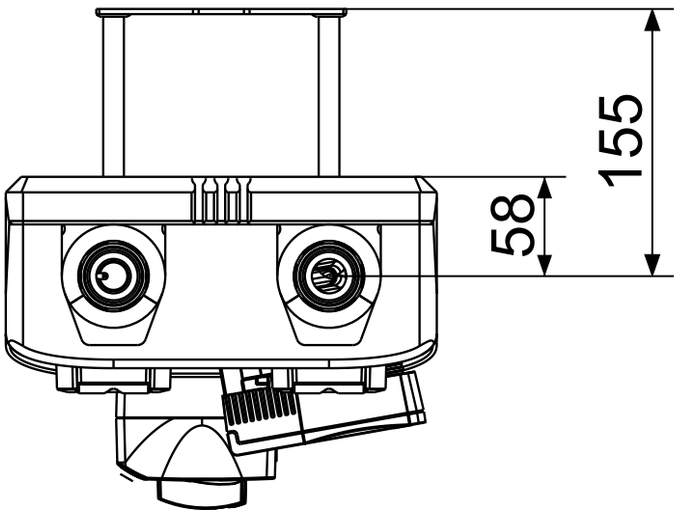
155
58