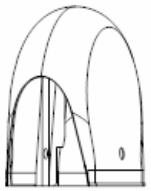

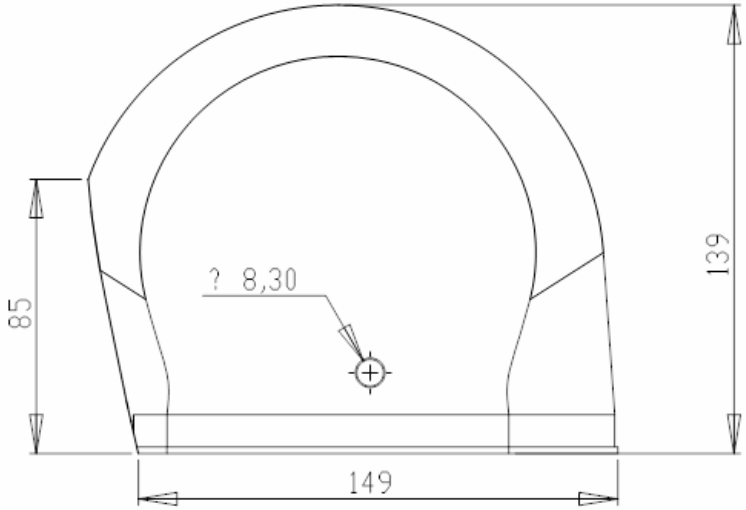

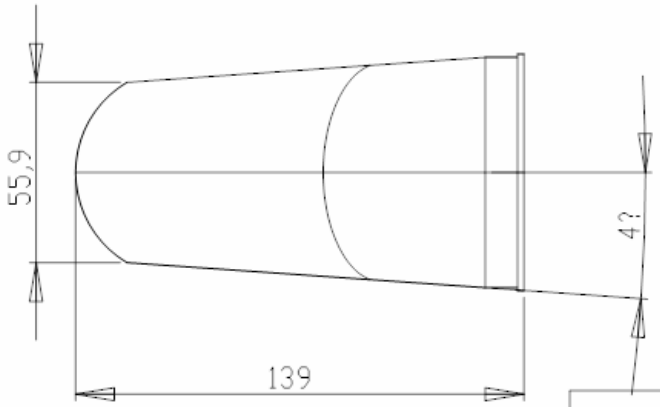

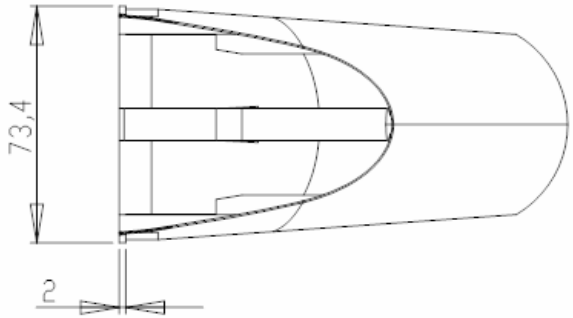

		FINISH:		DEBUR AND BREAK SHARP EDGES	DO NOT SCALE DRAWING	REVISION	3
	NAME	SIGNATURE	DATE		TITLE:		
DRAWN	Bobek		12.11.07				
				MATERIAL: PP	DWG NO. kabelovy kryt 50-63_verze3		A4
				WEIGHT:	SCALE:1:2	SHEET 1 OF 1	